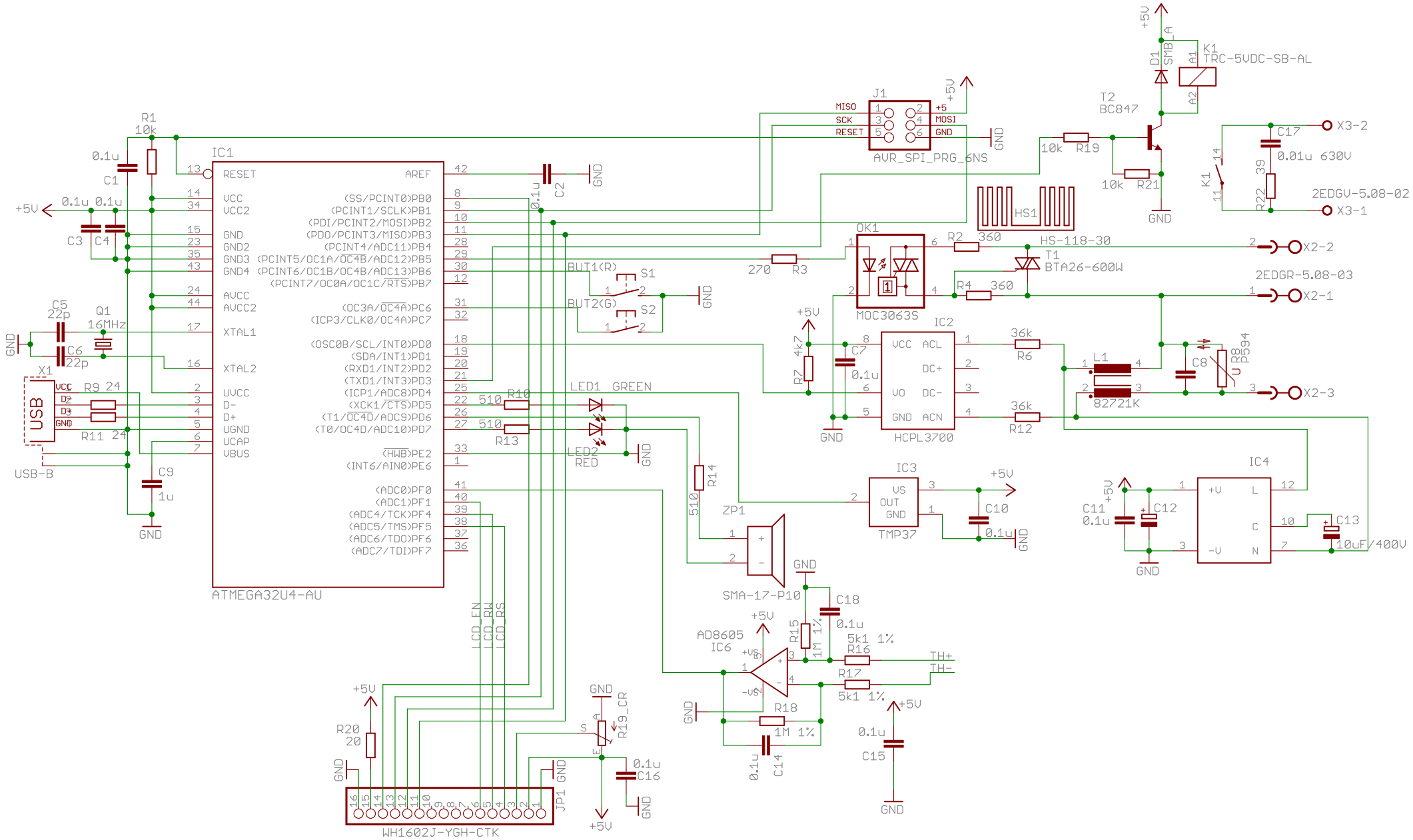
IC1
ATMEGA32U4-AU
RESET
VCC
VCC2
GND
GND2
GND3
GND4
AVCC
AVCC2
XTAL1
XTAL2
UVCC
D-
D+
UGND
UCAP
VBUS
AREF
(SS/PCINT0)PB0
(PCINT1/SCLK)PB1
(PDI/PCINT2/MOSI)PB2
(PDO/PCINT3/MISO)PB3
(PCINT4/ADC11)PB4
(PCINT5/OC1A/OC4B/ADC12)PB5
(PCINT6/OC1B/OC4B/ADC13)PB6
(PCINT7/OC0A/OC1C/RTS)PB7
(OC3A/OC4A)PC6
(ICP3/CLK0/OC4A)PC7
(OSC0B/SCL/INT0)PD0
(SDA/INT1)PD1
(RXD1/INT2)PD2
(TXD1/INT3)PD3
(ICP1/ADC8)PD4
(XCK1/CTS)PD5
(T1/OC4D/ADC9)PD6
(T0/OC4D/ADC10)PD7
(HWB)PE2
(INT6/AIN0)PE6
(ADC0)PF0
(ADC1)PF1
(ADC4/TCK)PF4
(ADC5/TMS)PF5
(ADC6/TDO)PF6
(ADC7/TDI)PF7
R1 10k
C1 0.1u
C2 0.1u
C3 0.1u
C4 0.1u
C5 22p
C6 22p
Q1 16MHz
C9 1u
X1 USB
USB-B
R9 24
R11 24
J1
MISO
SCK
RESET
MOSI
GND
AVR_SPI_PRG_6NS
BUT1(R)
BUT2(G)
S1
S2
R10 510
R13 510
LED1 GREEN
LED2 RED
R14 510
ZP1
SMA-17-P10
LCD_EN
LCD_RW
LCD_RS
R20 20
JP1
WH1602J-YGH-CTK
R19_CR
C16 0.1u
OK1
MOC3063S
R3 270
R2 360
R4 360
HS1
HS-118-30
T1 BTA26-600W
R7 4k7
C7 0.1u
IC2
HCPL3700
VCC
ACL
DC+
VO
DC-
GND
ACN
R6 36k
R12 36k
L1 82721K
C8
R8 P594
X2-1
X2-2
X2-3
2EDGR-5.08-03
IC3
TMP37
VS
OUT
GND
C10 0.1u
AD8605
IC6
R15 1M 1%
R16 5k1 1%
R17 5k1 1%
R18 1M 1%
C14 0.1u
C15 0.1u
C18 0.1u
TH+
TH-
IC4
C11 0.1u
C12
C13 10uF/400V
D1 SMB_A
K1 TRC-5VDC-SB-AL
T2 BC847
R19 10k
R21 10k
C17 0.01u 630V
R22 39
2EDGV-5.08-02
X3-1
X3-2
+5V